ASSEMBLY TEMPLATE

STORAGE CABINET TABLES-DOUBLE

2300K, C2300K, 2400K, & C2400K SERIES
ASSEMBLY INSTRUCTIONS

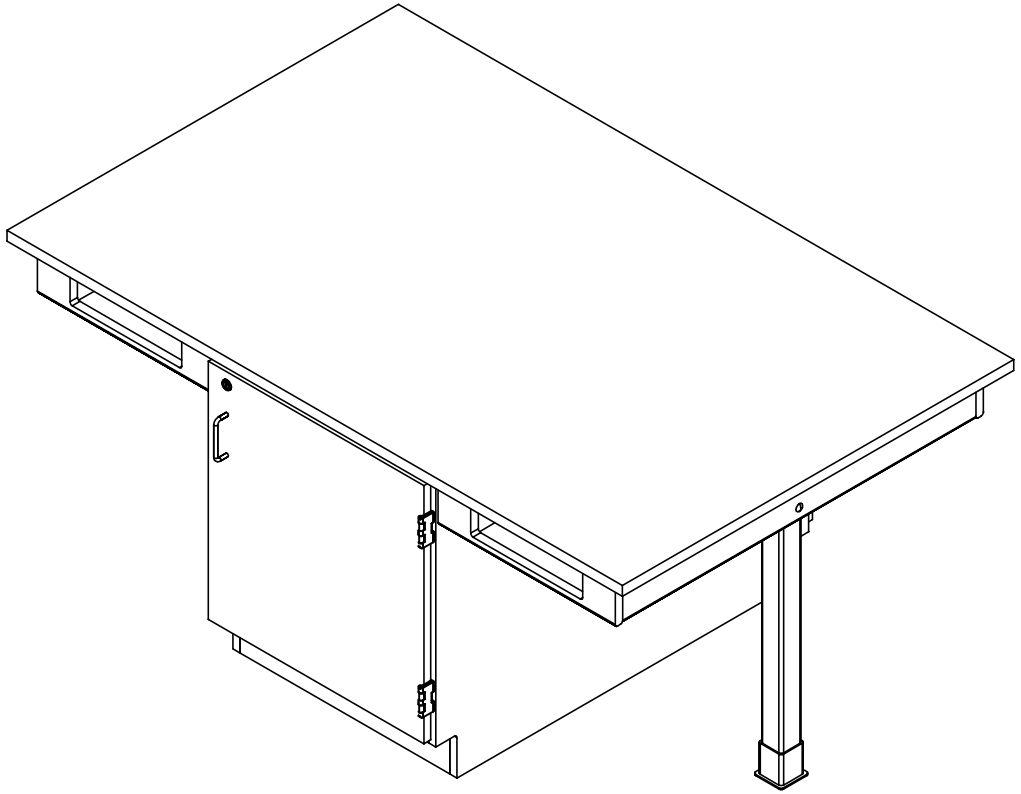

NOTE:

1. MODEL VIEWS MAY NOT REPRESENT EXACT MODEL PURCHASED

REV.	DESCRIPTION	DATE	NAME	ECN NO.
A	CREATED DRAWING	3/15/16	EMK	-
REVISION LEVEL				

ALL DIMENSIONS ARE IN INCHES UNLESS NOTED OTHERWISE CABINET SQUARENESS = ± .0625 FRACTIONAL VALUES = ± 1/32" - ALL VALUES ± OVERALL -	DWN BY:	EMK	DATE DWN: 3/15/16
	APR BY:		DATE APR:
	APR BY:		DATE APR:

CONFIDENTIAL:
ALL DESIGN RIGHTS RESERVED
THE INFORMATION, DATA, DESIGN, AND DRAWINGS EMBODIED IN THIS DOCUMENT AND ALL REPRODUCTIONS THEREOF ARE THE EXCLUSIVE PROPERTY OF DIVERSIFIED WOODCRAFTS, INC.

THESE DOCUMENTS ARE SUPPLIED WITH THE UNDERSTANDING THAT THEY WILL NOT BE DISCLOSED TO THIRD PARTIES WITHOUT WRITTEN CONSENT OF DIVERSIFIED WOODCRAFTS, INC. ANY REPRODUCTION IN PART OR WHOLE WITHOUT WRITTEN CONSENT IS SUBJECT TO LEGAL ACTION.

TITLE:
STORAGE CABINET TABLES-DOUBLE
ASSEMBLY INSTRUCTIONS

DRAWING NUMBER:	SCALE:	SHEET:	REVISION:
STORAGE CABINET TABLES	NTS	1 OF 7	REV A

ASSEMBLY TEMPLATE

TOOLS REQUIRED

½" WRENCH
½" SOCKET AND TORQUE WRENCH - OPTIONAL
CONTACT CEMENT
SCREW DRIVER
C-CLAMPS
SHIM STOCK (IF NEEDED)

ASSEMBLY COMPONENTS

ITEMS INCLUDED	PART #	PART DESCRIPTION	QTY
CABINET ASSEMBLY	VARIES	CABINET STYLES VARY WITH CHOICE OF TABLE STYLE	1
TOP AND APRON ASSEMBLY	N/A	TOP ASSEMBLY (FACTORY ASSEMBLED)	2
LEGS	500100	LEG,OAK 2.25X2.25X28.25	2
LEG HARDWARE	206618	LEG HARDWARE ASSY, BOOT,LEV,T-NUT	2
RUBBER BASE MOLDING	100283	RUBBER BASE MOLDING(SOLD BY FOOT)	10
STAINLESS STEEL CORNERS	100057	CORNERS-STAINLESS STEEL,BASE	4
SCREWS - BASE	100064	SCREW,#6X½ PTH SMS SS SCREW	16
CARRIAGE BOLT	100447	BOLT,5/16X4-1/2 CARRIAGE	4
HEX NUT	100044	NUT,HEX 5/16-18 STEEL ZINC	4
WASHER	100451	WASHER,5/16 FLAT ZINC PLATED	4
SILICONE	100711	SILICONE FOR TOPS	1

NOTE:

1. *X* INDICATES ITEMS ONLY USED FOR THE UNITS WITH EPOXY OR PHENOLIC TOPS.
   1.1. EX: 2304K, C2304K, 2306K, C2306K, 2404K, C2404K, 2406K, & C2406K SERIES

REV.	DESCRIPTION	DATE	NAME	ECN NO.
A	CREATED DRAWING	3/15/16	EMK	-

REVISION LEVEL

ALL DIMENSIONS ARE IN INCHES UNLESS NOTED OTHERWISE

CABINET SQUARENESS = ± .0625
FRACTIONAL VALUES = ± 1/32"
- ALL VALUES ± OVERALL -

DWN BY:	EMK	DATE DWN:	3/15/16
APR BY:		DATE APR:	
APR BY:		DATE APR:	

CONFIDENTIAL:
ALL DESIGN RIGHTS RESERVED
THE INFORMATION, DATA, DESIGN, AND DRAWINGS EMBODIED IN THIS DOCUMENT AND ALL REPRODUCTIONS THEREOF ARE THE EXCLUSIVE PROPERTY OF DIVERSIFIED WOODCRAFTS, INC.

THESE DOCUMENTS ARE SUPPLIED WITH THE UNDERSTANDING THAT THEY WILL NOT BE DISCLOSED TO THIRD PARTIES WITHOUT WRITTEN CONSENT OF DIVERSIFIED WOODCRAFTS, INC. ANY REPRODUCTION IN PART OR WHOLE WITHOUT WRITTEN CONSENT IS SUBJECT TO LEGAL ACTION.

TITLE:
STORAGE CABINET TABLES-DOUBLE
TOOLS AND ASSEMBLY COMPONENTS

DRAWING NUMBER:	SCALE:	SHEET:	REVISION:
STORAGE CABINET TABLES	NTS	2 OF 7	REV A

ASSEMBLY TEMPLATE

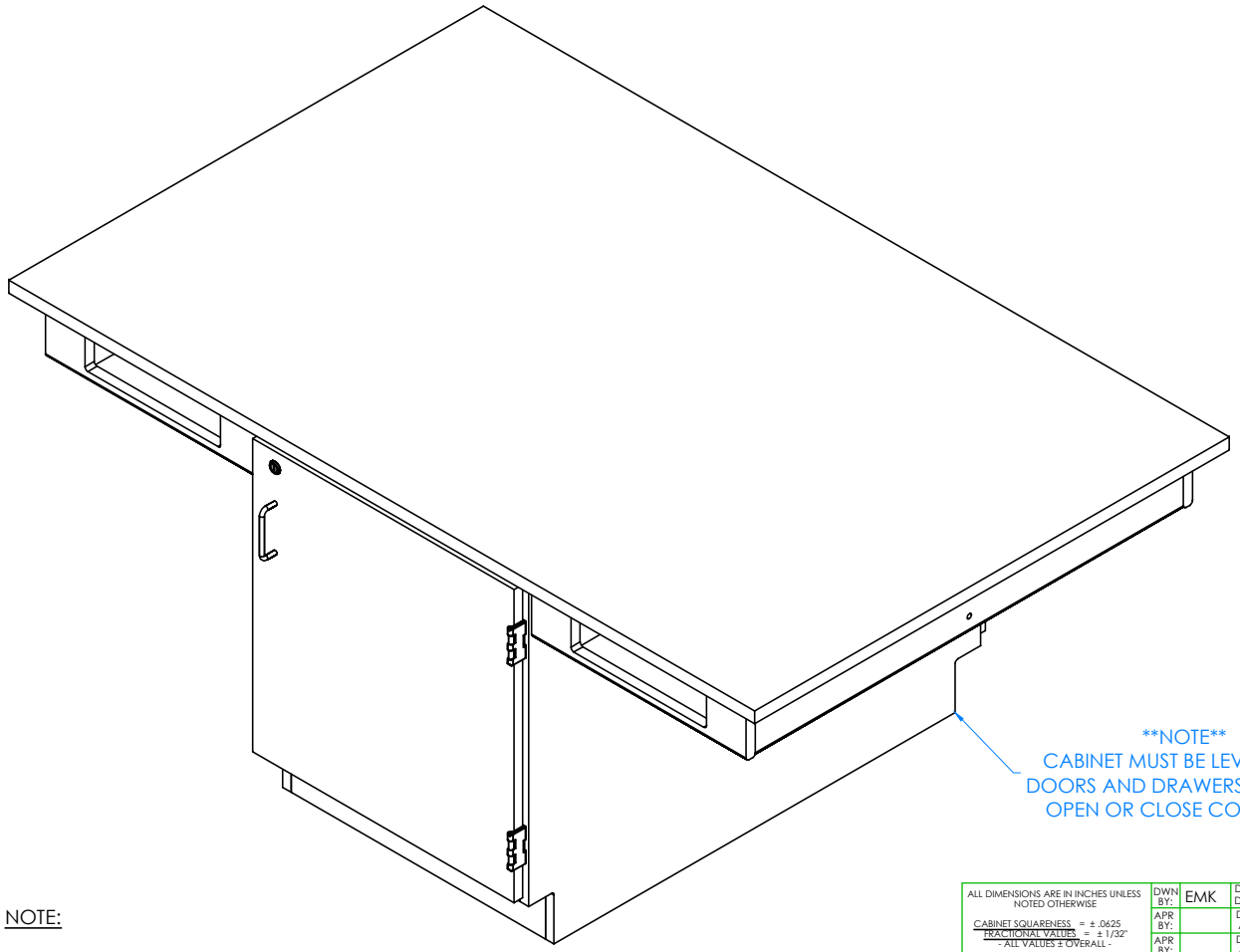

NOTE
CABINET MUST BE LEVELED OR
DOORS AND DRAWERS MAY NOT
OPEN OR CLOSE CORRECTLY

STEP 1:

- POSITION UNIT IN DESIRED LOCATION.
- LEVEL CABINET.
- ANCHOR TO FLOOR.
- YOU WILL NEED TWO OR THREE PEOPLE TO HELP WITH THIS STEP, AS TOP ASSEMBLY WILL BE HEAVY.

NOTE:

1.

REV.	DESCRIPTION	DATE	NAME	ECN NO.
A	CREATED DRAWING	3/15/16	EMK	-

REVISION LEVEL

ALL DIMENSIONS ARE IN INCHES UNLESS NOTED OTHERWISE	DWN BY: EMK	DATE DWN: 3/15/16	
CABINET SQUARENESS = ± .0625 FRACTIONAL VALUES = ± 1/32" - ALL VALUES ± OVERALL -	APR BY:	DATE APR:	
	APR BY:	DATE APR:	

CONFIDENTIAL:
ALL DESIGN RIGHTS RESERVED
THE INFORMATION, DATA, DESIGN, AND DRAWINGS EMBODIED IN THIS DOCUMENT AND ALL REPRODUCTIONS THEREOF ARE THE EXCLUSIVE PROPERTY OF DIVERSIFIED WOODCRAFTS, INC.

THESE DOCUMENTS ARE SUPPLIED WITH THE UNDERSTANDING THAT THEY WILL NOT BE DISCLOSED TO THIRD PARTIES WITHOUT WRITTEN CONSENT OF DIVERSIFIED WOODCRAFTS, INC. ANY REPRODUCTION IN PART OR WHOLE WITHOUT WRITTEN CONSENT IS SUBJECT TO LEGAL ACTION.

TITLE:
STORAGE CABINET TABLES-DOUBLE
ASSEMBLY INSTRUCTIONS

DRAWING NUMBER:	SCALE:	SHEET:	REVISION:
STORAGE CABINET TABLES	NTS	3 OF 7	REV A

STEP 2:

- LINE UP HOLES IN THE WING WITH HOLES IN THE LEG AND INSERT THE CARRIAGE BOLTS, WASHER, AND NUT.
- TIGHTEN NUT USING ½" WRENCH OR ½" SOCKET AND TORQUE WRENCH, TO A MINIMUM OF 12FT LBS BUT NOT TO EXCEED 17FT LBS.
- LEG SHOULD BE PERPENDICULAR TO THE WING.
- REPEAT FOR OTHER LEG.

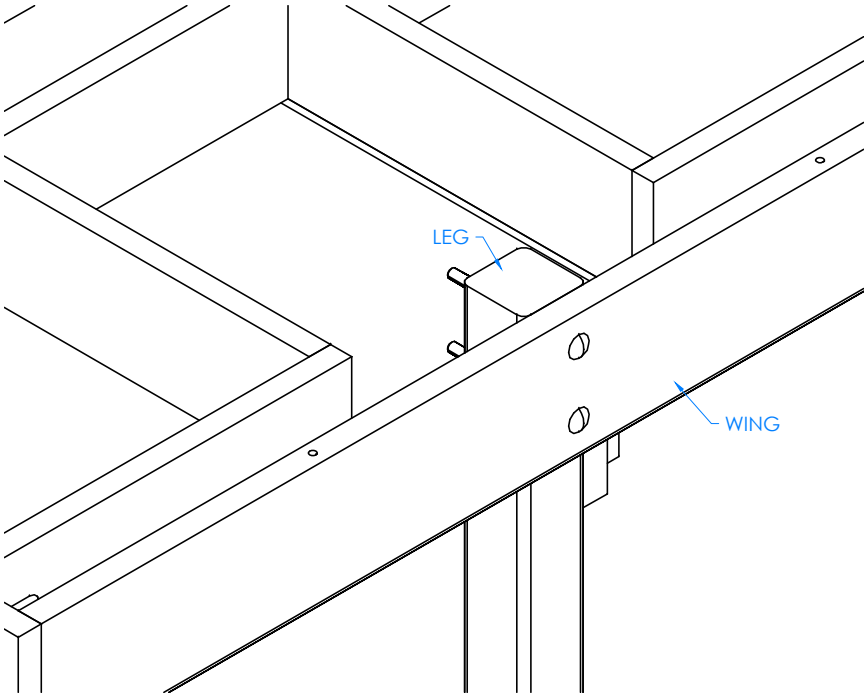

OUTSIDE OF CENTER LEG ASSEMBLY SHOWN
(TOP REMOVED TO SHOW CLARITY)

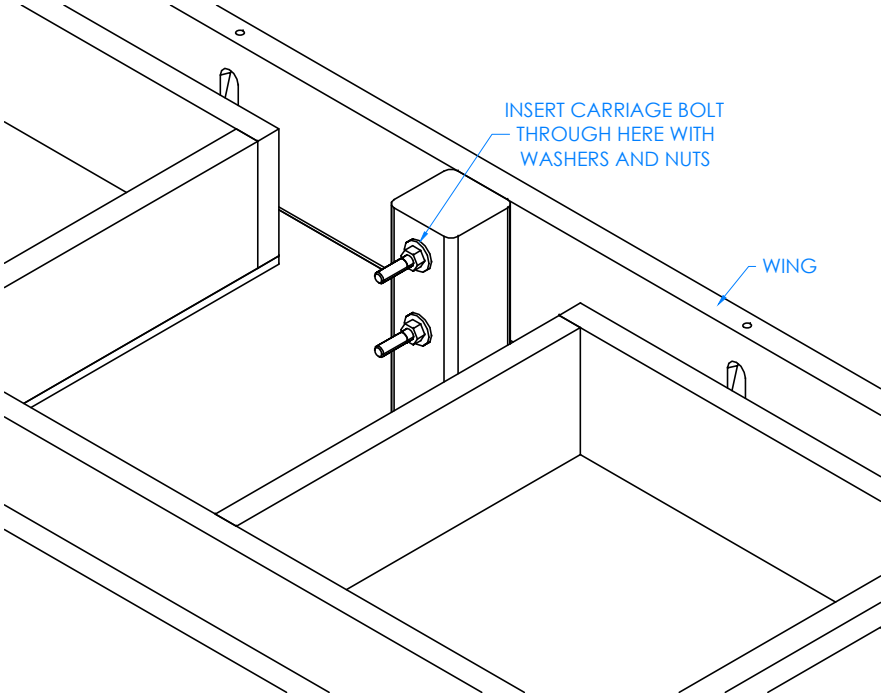

INSIDE OF CENTER LEG ASSEMBLY SHOWN
(TOP REMOVED TO SHOW CLARITY)

NOTE:

1.

REV.	DESCRIPTION	DATE	NAME	ECN NO.
A	CREATED DRAWING	3/15/16	EMK	-
REVISION LEVEL				

ALL DIMENSIONS ARE IN INCHES UNLESS NOTED OTHERWISE

CABINET SQUARENESS = ± .0625
FRACTIONAL VALUES = ± 1/32"
- ALL VALUES ± OVERALL -

DWN BY:	EMK	DATE DWN:	3/15/16
APR BY:		DATE APR:	
APR BY:		DATE APR:	

CONFIDENTIAL:
ALL DESIGN RIGHTS RESERVED
THE INFORMATION, DATA, DESIGN, AND DRAWINGS EMBODIED IN THIS DOCUMENT AND ALL REPRODUCTIONS THEREOF ARE THE EXCLUSIVE PROPERTY OF DIVERSIFIED WOODCRAFTS, INC.

THESE DOCUMENTS ARE SUPPLIED WITH THE UNDERSTANDING THAT THEY WILL NOT BE DISCLOSED TO THIRD PARTIES WITHOUT WRITTEN CONSENT OF DIVERSIFIED WOODCRAFTS, INC. ANY REPRODUCTION IN PART OR WHOLE WITHOUT WRITTEN CONSENT IS SUBJECT TO LEGAL ACTION.

TITLE:
STORAGE CABINET TABLES-DOUBLE
ASSEMBLY INSTRUCTIONS

DRAWING NUMBER:	SCALE:	SHEET:	REVISION:
STORAGE CABINET TABLES	NTS	4 OF 7	REV A

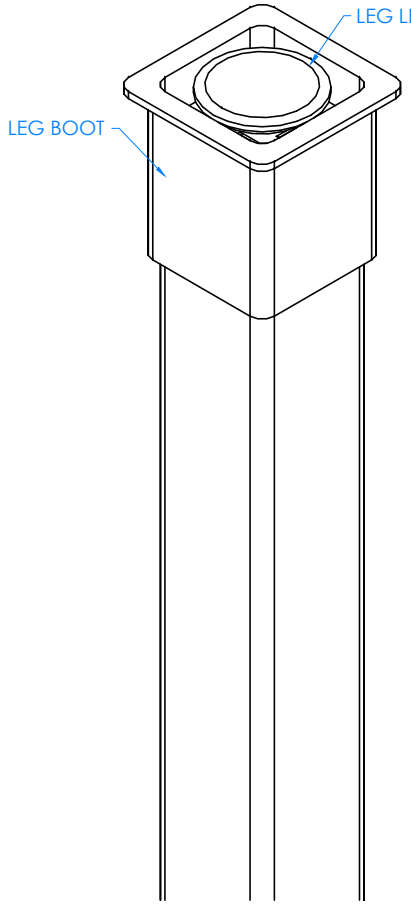

CLOSE UP OF LEG LEVELER AND LEG BOOT ASSEMBLY

STEP 3:

- SLIDE LEG BOOTS ONTO LEGS WITH FLARED END TOWARD BOTTOM OF LEGS.
- SCREW LEG LEVELERS INTO T-NUT ON BOTTOM OF LEGS.

NOTE:

1.

REV.	DESCRIPTION	DATE	NAME	ECN NO.
A	CREATED DRAWING	3/15/16	EMK	-

REVISION LEVEL

ALL DIMENSIONS ARE IN INCHES UNLESS NOTED OTHERWISE

CABINET SQUARENESS = ± .0625
FRACTIONAL VALUES = ± 1/32"
- ALL VALUES ± OVERALL -

DWN BY:	EMK	DATE DWN:	3/15/16
APR BY:		DATE APR:	
APR BY:		DATE APR:	

CONFIDENTIAL:
ALL DESIGN RIGHTS RESERVED
THE INFORMATION, DATA, DESIGN, AND DRAWINGS EMBODIED IN THIS DOCUMENT AND ALL REPRODUCTIONS THEREOF ARE THE EXCLUSIVE PROPERTY OF DIVERSIFIED WOODCRAFTS, INC.

THESE DOCUMENTS ARE SUPPLIED WITH THE UNDERSTANDING THAT THEY WILL NOT BE DISCLOSED TO THIRD PARTIES WITHOUT WRITTEN CONSENT OF DIVERSIFIED WOODCRAFTS, INC. ANY REPRODUCTION IN PART OR WHOLE WITHOUT WRITTEN CONSENT IS SUBJECT TO LEGAL ACTION.

TITLE:
STORAGE CABINET TABLES-DOUBLE
ASSEMBLY INSTRUCTIONS

DRAWING NUMBER:	SCALE:	SHEET:	REVISION:
STORAGE CABINET TABLES	NTS	5 OF 7	REV A

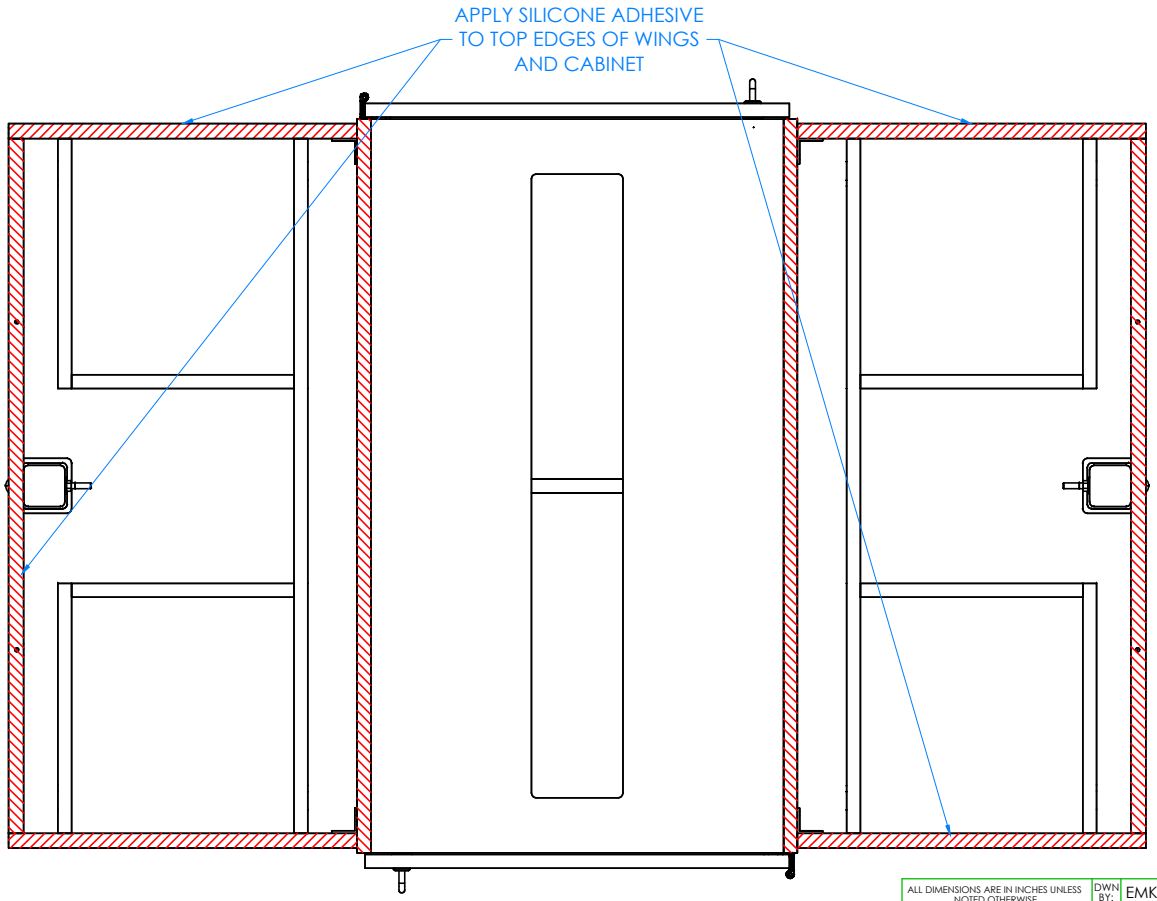

TOP VIEW OF TABLE SHOWN

STEP 4:

- ADJUST LEG LEVELERS TO LEVEL TABLE.
- IF YOU *DO NOT* HAVE A PHENOLIC OR EPOXY TOP, SKIP TO STEP 5.
- APPLY SILICONE ADHESIVE TO TOP EDGES OF CABINET AND WINGS.
- PLACE TOP ON UNIT WITH PROPER OVERHANG (2" ON SIDES AND 1 ¼" ON FRONT AND BACK).
- CLAMP TOP TO WINGS AND TOP RAILS OF CABINET TO REMOVE ANY WARP USING SHIMS AND C-CLAMPS, IF NEEDED, WHEN ALIGNING TOP (DO THIS BEFORE ADHESIVE ON EDGES SETS UP).
- LET CURE FOR 6-12 HOURS.

NOTE:

1.

REV.	DESCRIPTION	DATE	NAME	ECN NO.
A	CREATED DRAWING	3/15/16	EMK	-
REVISION LEVEL				

ALL DIMENSIONS ARE IN INCHES UNLESS NOTED OTHERWISE

CABINET SQUARENESS = ± .0625
FRACTIONAL VALUES = ± 1/32"
- ALL VALUES ± OVERALL -

DWN BY:	EMK	DATE DWN:	3/15/16
APR BY:		DATE APR:	
APR BY:		DATE APR:	

CONFIDENTIAL:
ALL DESIGN RIGHTS RESERVED
THE INFORMATION, DATA, DESIGN, AND DRAWINGS EMBODIED IN THIS DOCUMENT AND ALL REPRODUCTIONS THEREOF ARE THE EXCLUSIVE PROPERTY OF DIVERSIFIED WOODCRAFTS, INC.

THESE DOCUMENTS ARE SUPPLIED WITH THE UNDERSTANDING THAT THEY WILL NOT BE DISCLOSED TO THIRD PARTIES WITHOUT WRITTEN CONSENT OF DIVERSIFIED WOODCRAFTS, INC. ANY REPRODUCTION IN PART OR WHOLE WITHOUT WRITTEN CONSENT IS SUBJECT TO LEGAL ACTION.

TITLE:
STORAGE CABINET TABLES-DOUBLE
ASSEMBLY INSTRUCTIONS

DRAWING NUMBER:	SCALE:	SHEET:	REVISION:
STORAGE CABINET TABLES	NTS	6 OF 7	REV A

ASSEMBLY TEMPLATE

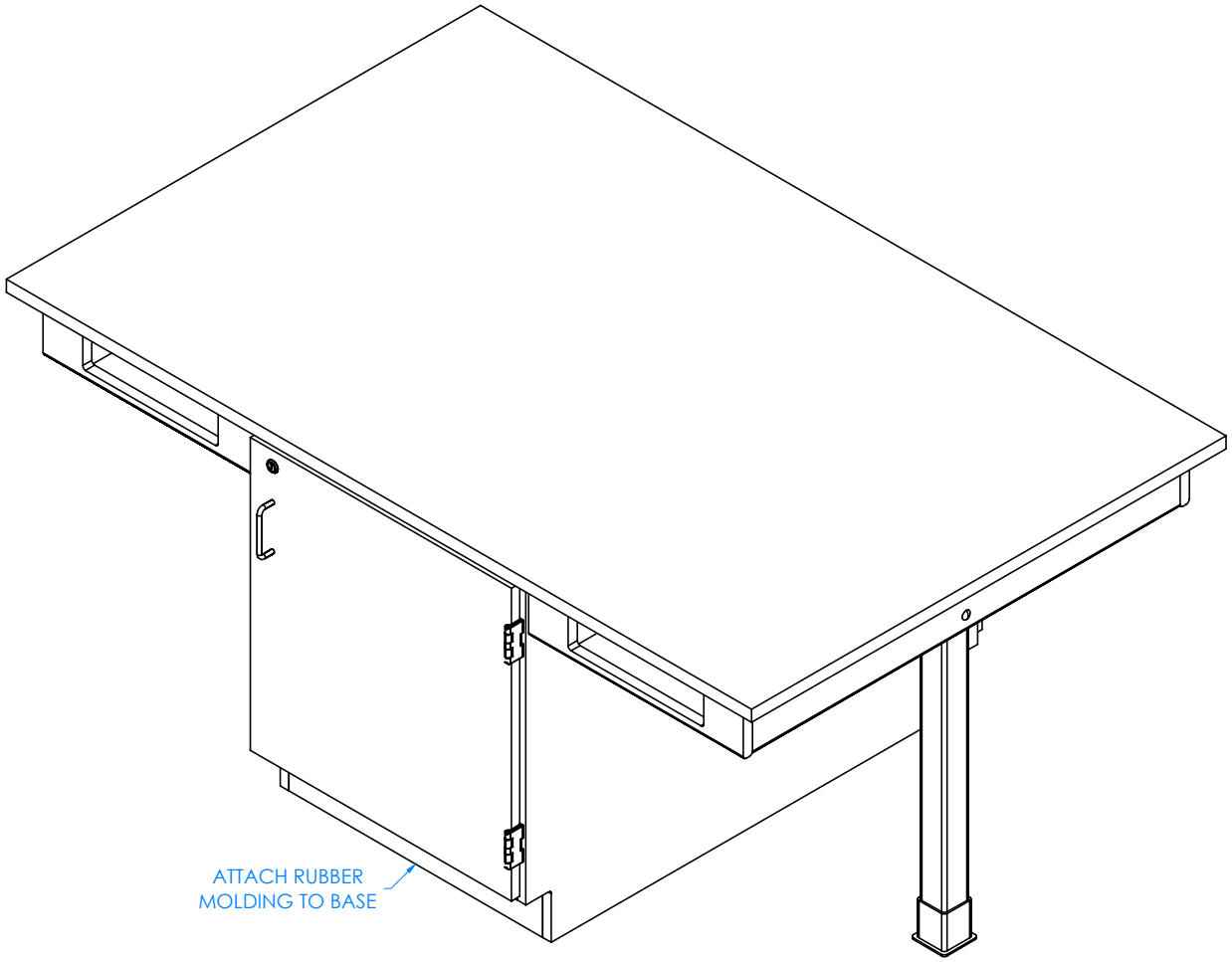

STEP 5:

- ATTACH RUBBER MOLDING TO BASE OF CABINET USING CONTACT CEMENT.
- SCREW STAINLESS STEEL CORNER BRACKETS ON EACH CORNER OVER BASE MOLDING WITH HARDWARE PROVIDED.

NOTE:

1.

COMPLETE UNIT SHOWN

REV.	DESCRIPTION	DATE	NAME	ECN NO.
A	CREATED DRAWING	3/15/16	EMK	-
REVISION LEVEL				

ALL DIMENSIONS ARE IN INCHES UNLESS NOTED OTHERWISE CABINET SQUARENESS = ± .0625 FRACTIONAL VALUES = ± 1/32" - ALL VALUES ± OVERALL -	DWN BY: EMK	DATE DWN: 3/15/16	
	APR BY:	DATE APR:	
	APR BY:	DATE APR:	

CONFIDENTIAL:
ALL DESIGN RIGHTS RESERVED
THE INFORMATION, DATA, DESIGN, AND DRAWINGS EMBODIED IN THIS DOCUMENT AND ALL REPRODUCTIONS THEREOF ARE THE EXCLUSIVE PROPERTY OF DIVERSIFIED WOODCRAFTS, INC.

THESE DOCUMENTS ARE SUPPLIED WITH THE UNDERSTANDING THAT THEY WILL NOT BE DISCLOSED TO THIRD PARTIES WITHOUT WRITTEN CONSENT OF DIVERSIFIED WOODCRAFTS, INC. ANY REPRODUCTION IN PART OR WHOLE WITHOUT WRITTEN CONSENT IS SUBJECT TO LEGAL ACTION.

TITLE:
STORAGE CABINET TABLES-DOUBLE
ASSEMBLY INSTRUCTIONS

DRAWING NUMBER:	SCALE:	SHEET:	REVISION:
STORAGE CABINET TABLES	NTS	7 OF 7	REV A